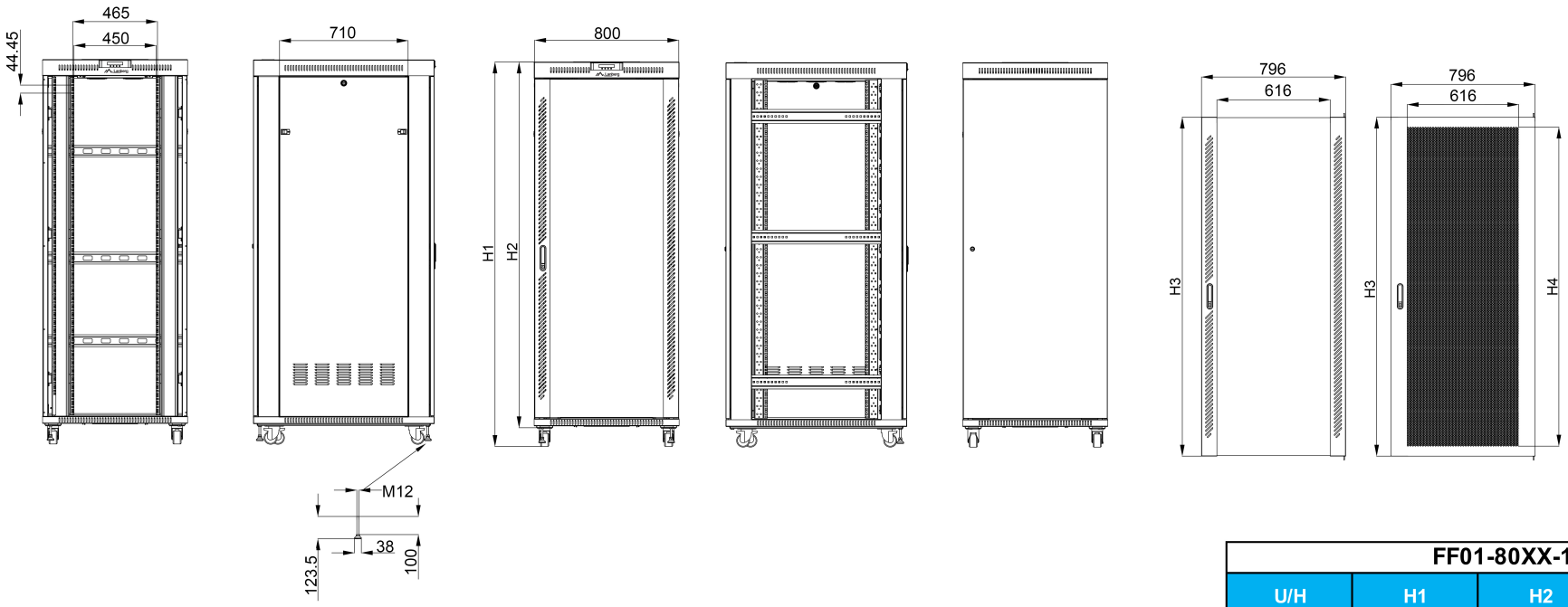


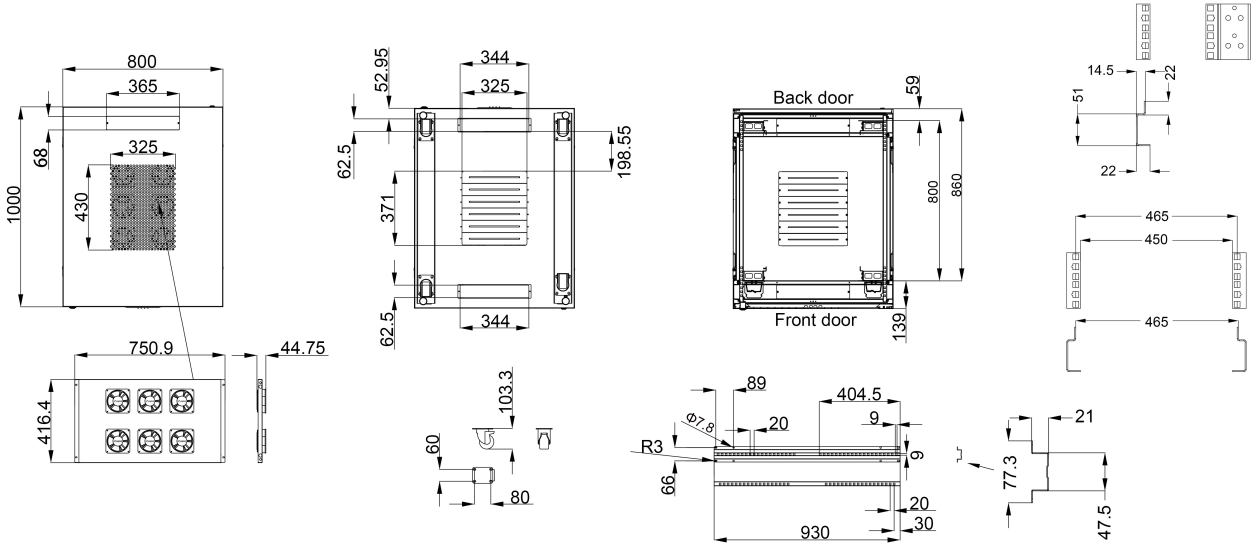


| FF01-80XX-12/23BL | | | | |
|---|---|---|---|---|
| U/H | H1 | H2 | H3 | H4 |
| 15 | 923.3 | 820.0 | 671.9 | 561.9 |
| 18 | 1056.6 | 953.3 | 805.2 | 695.2 |
| 22 | 1234.4 | 1131.1 | 983.0 | 873.0 |
| 24 | 1323.3 | 1220.0 | 1071.9 | 961.9 |
| 27 | 1456.7 | 1353.4 | 1205.3 | 1095.3 |
| 32 | 1678.9 | 1575.6 | 1427.5 | 1317.5 |
| 37 | 1901.2 | 1797.9 | 1649.8 | 1539.8 |
| 42 | 2123.4 | 2020.1 | 1872.0 | 1762.0 |
| 47 | 2345.7 | 2242.4 | 2094.3 | 1984.3 |

*Note: H1= Height include castor
H2= Height between top and bottom
H3= Height of door
H4= Height of the mesh

Lanberg